# FIXED-BIAS CIRCUIT

## BJT DC BIASING

*prepared by:*

**Gyro A. Madrona**

Electronics Engineer

# GRADING SYSTEM

# FINAL GRADE

| 30% | 30% | **40%** |
|---|---|---|
| PRELIM | MIDTERM | ENDTERM |

# TERM GRADE

50%

WEEKLY

50%

EXAM

# 100%

LABORATORY

# PENALTY

0

ABSENT

3

45-min LATE

7 max

15-min LATE

## TOPIC OUTLINE

### Fixed-Bias Circuit

- Base-Emitter Loop
- Collector-Emitter Loop
- Load Line Analysis

# FIXED-BIAS CIRCUIT

Bipolar

"two polarities"

## Bipolar Junction Transistor

BJT uses both free **electrons** and **holes**

# BASIC RELATIONSHIPS

$$v_{BE} = 0.7V$$

$$i_E = (\beta + 1)i_B$$

$$i_E \cong i_C$$

$$i_c = \beta i_B$$

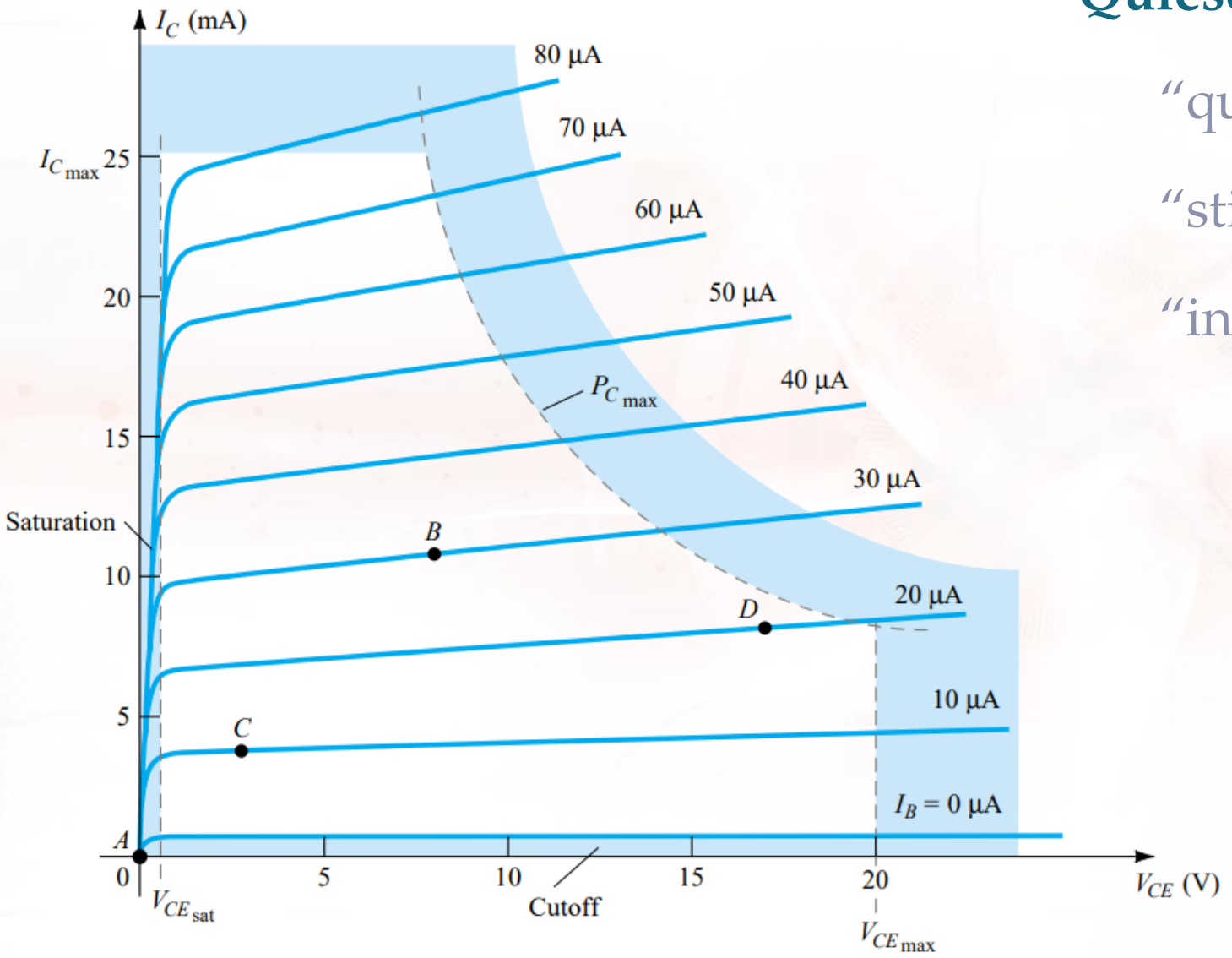


## **Quiescent Point** (Q-point)

"quiet"

"still"

"inactive"

# BASE-EMITTER LOOP

KVL @ B-E,

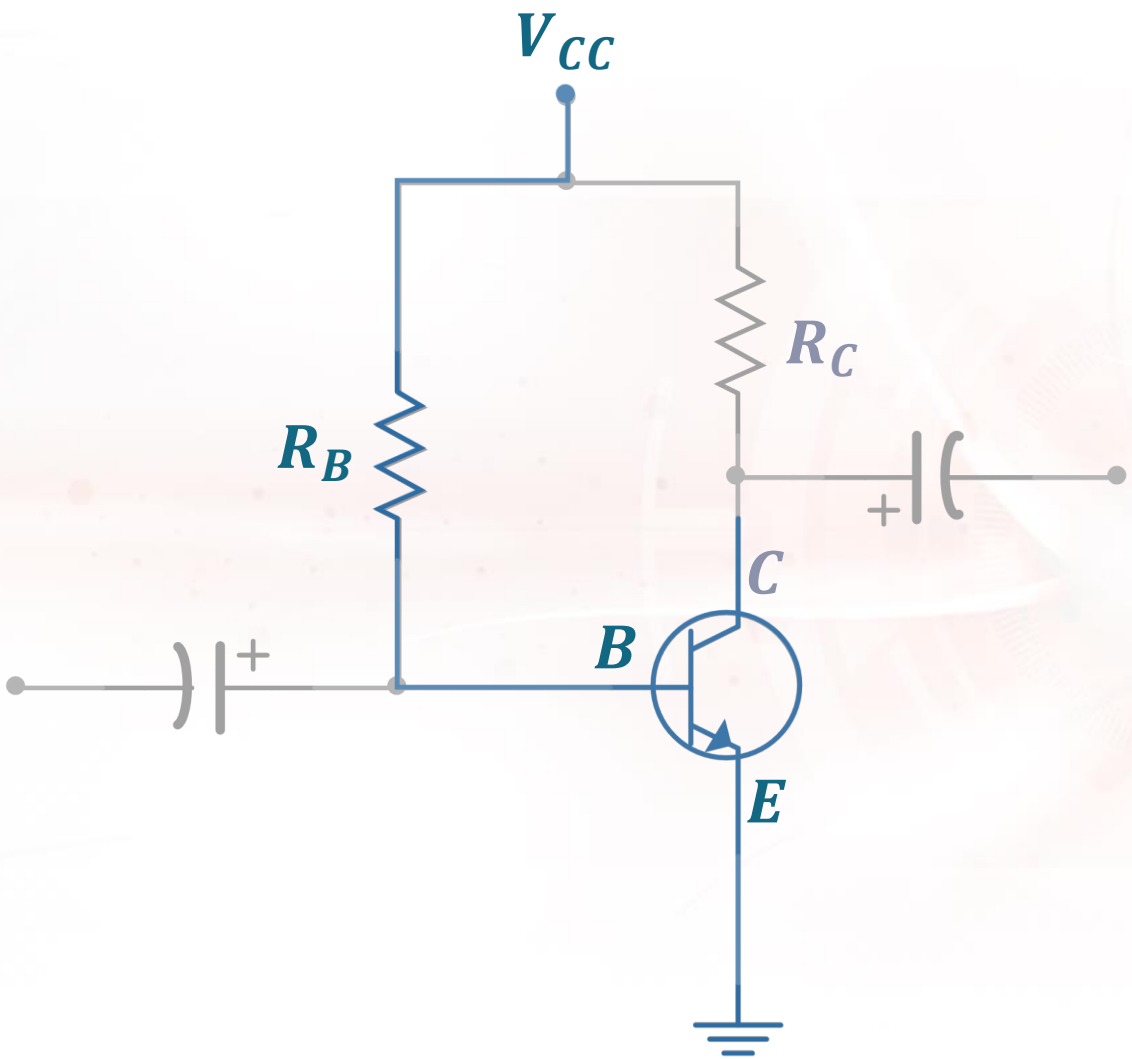


$$i_B = \frac{V_{CC} - v_{BE}}{R_B}$$

# COLLECTOR-EMITTER LOOP

KVL @ C-E,

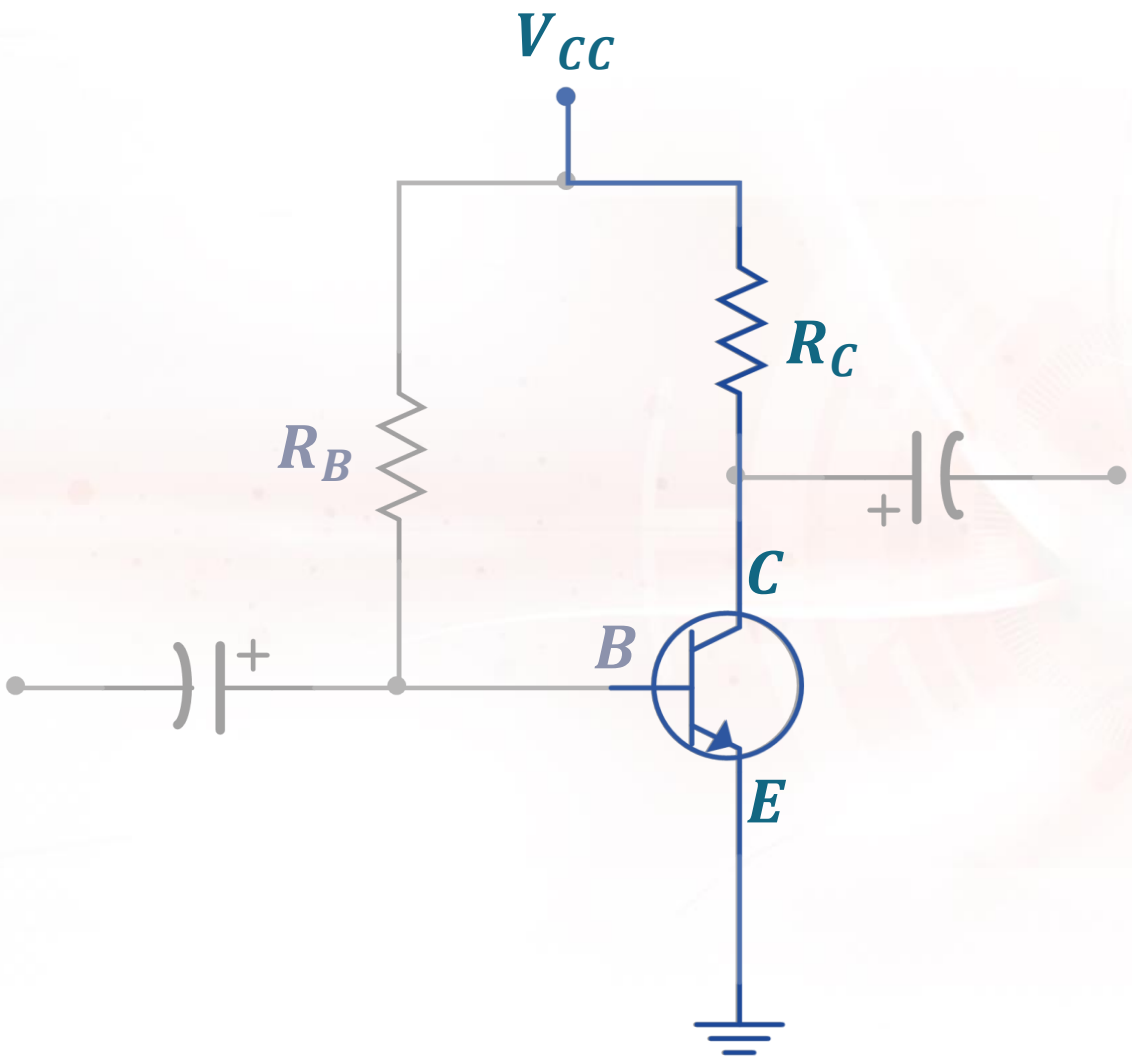


$$v_{CE} = V_{CC} - i_C R_C$$

Determine the following for the **fixed-biasing** network.

$i_{BQ}$ and $i_{CQ}$

$v_{CEQ}$

$v_B$ and $v_C$

$v_{BC}$

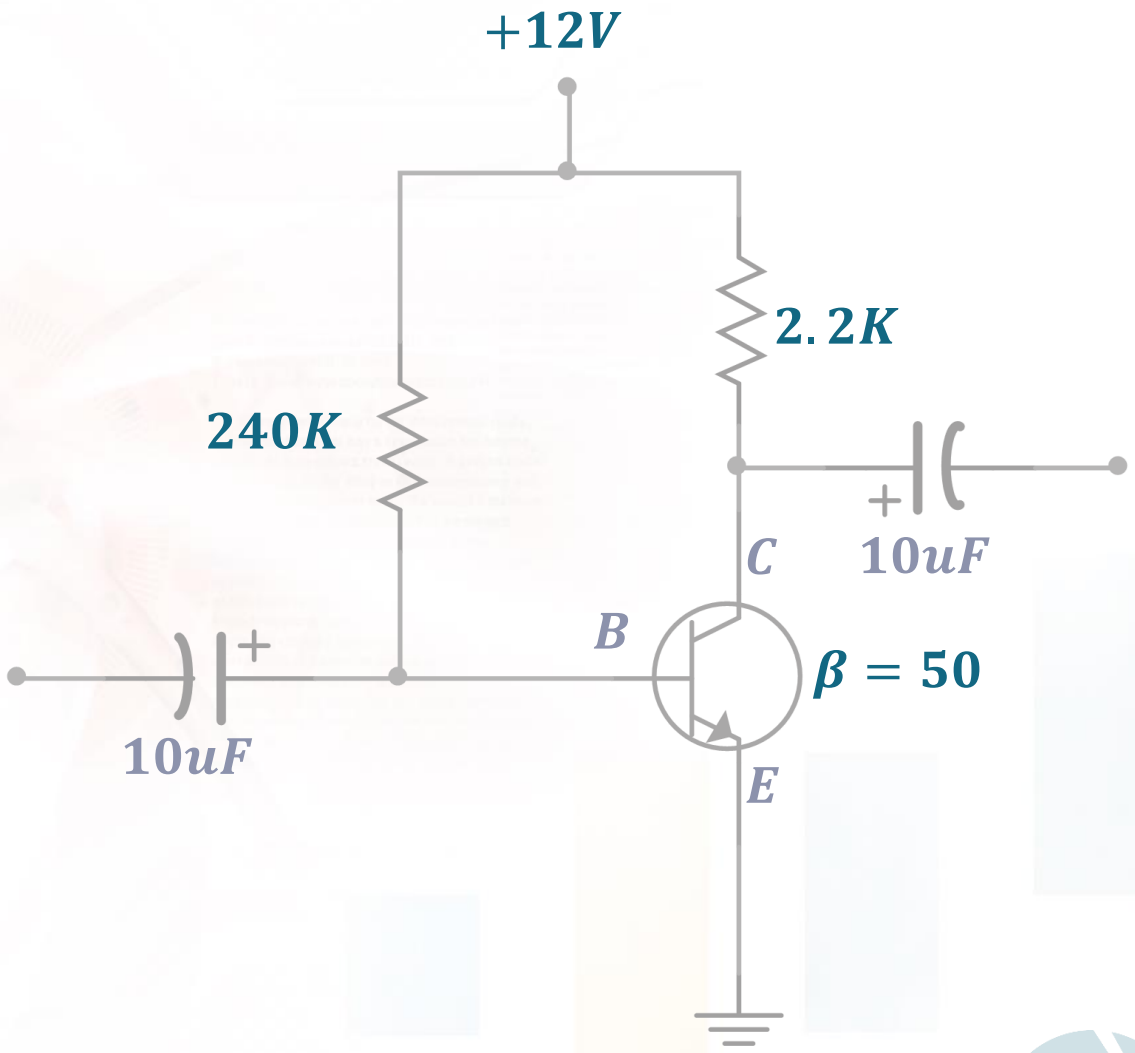

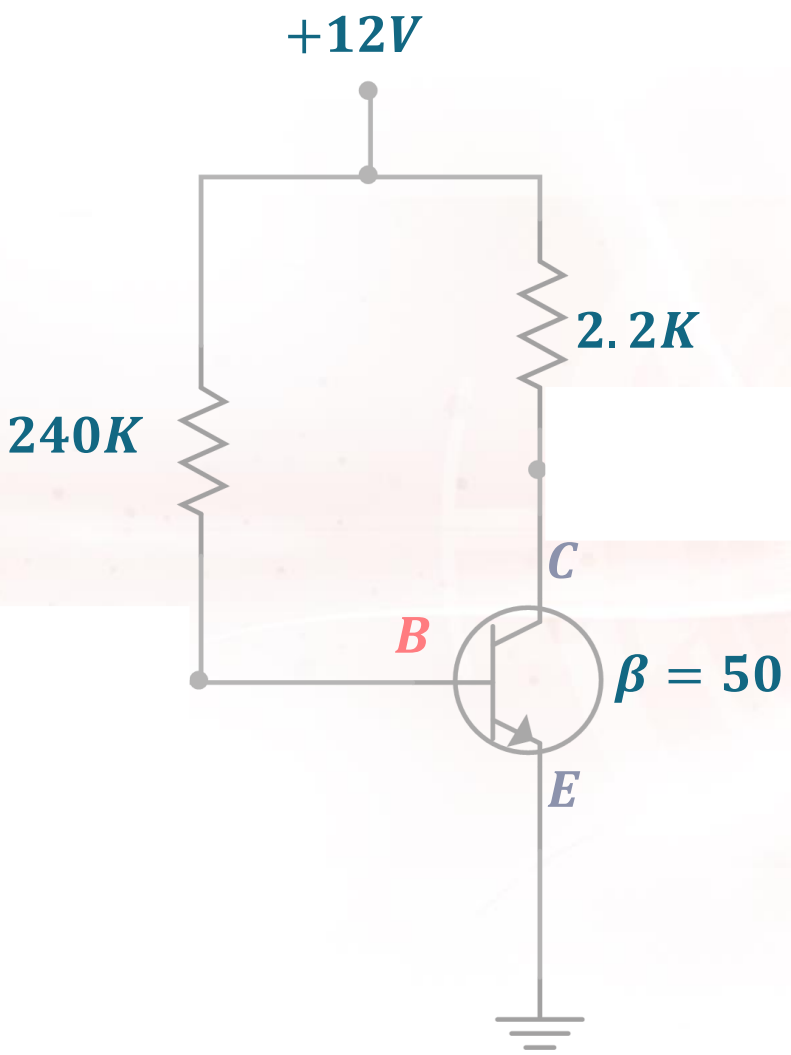
+12V
2.2K
240K
C
B
β = 50
E

$i_{CQ}$-

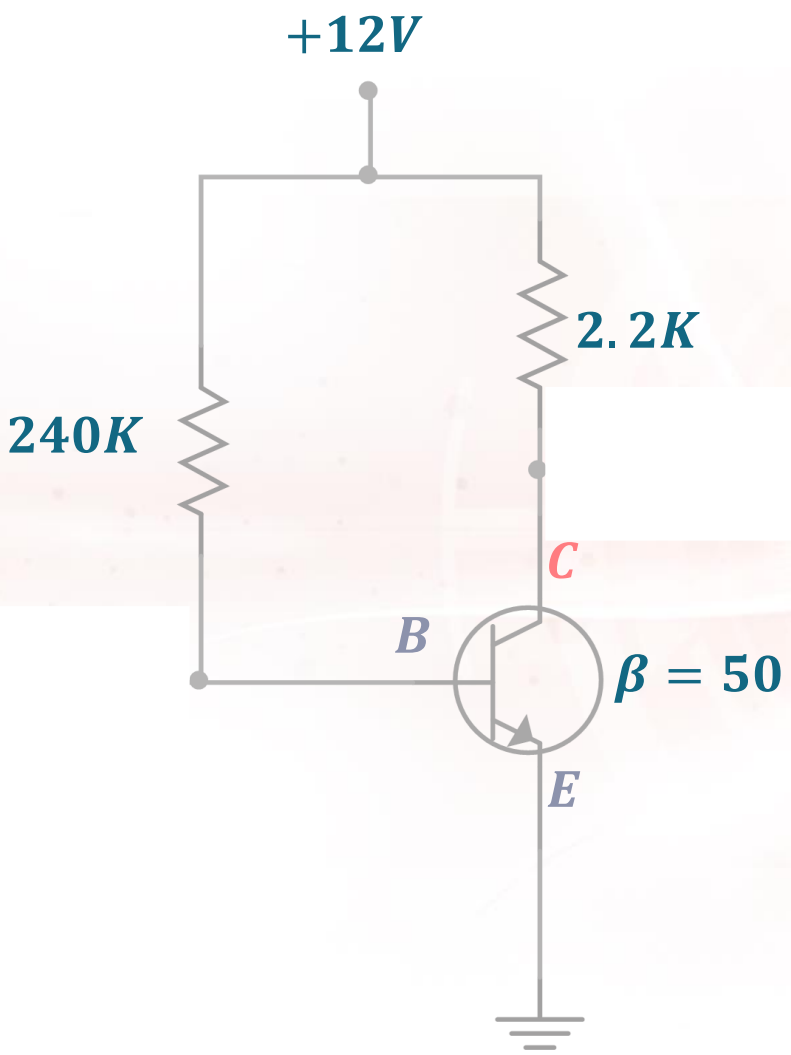

$v_{CEQ}$-

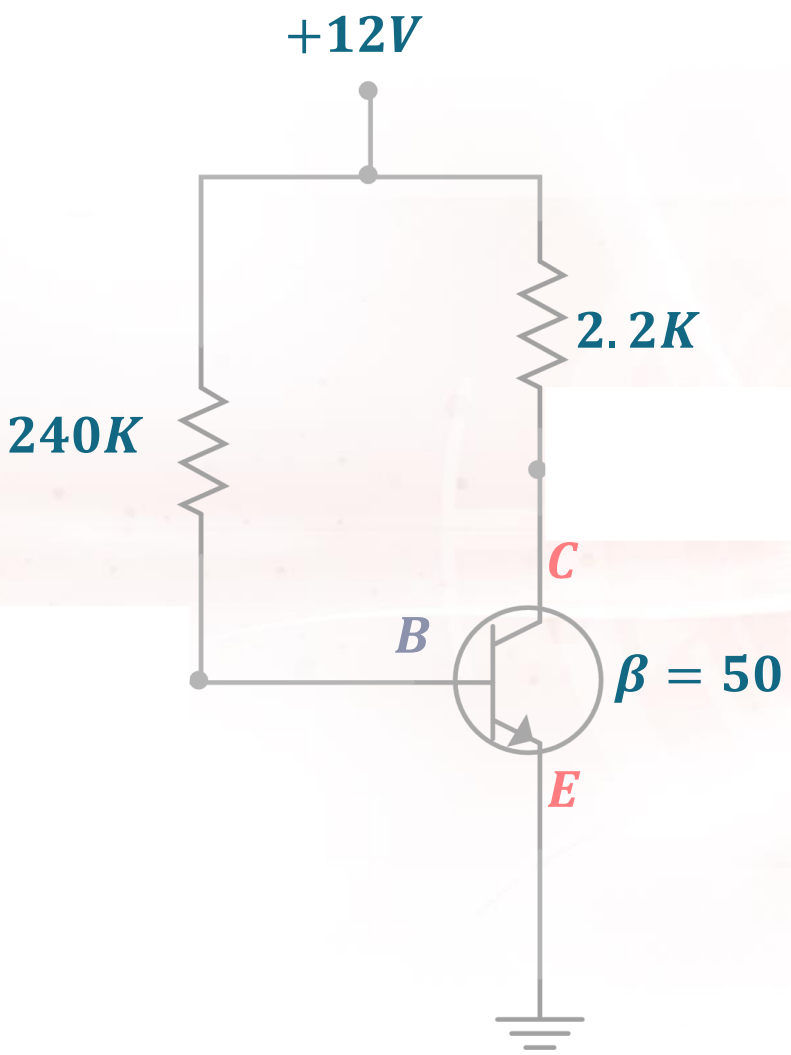

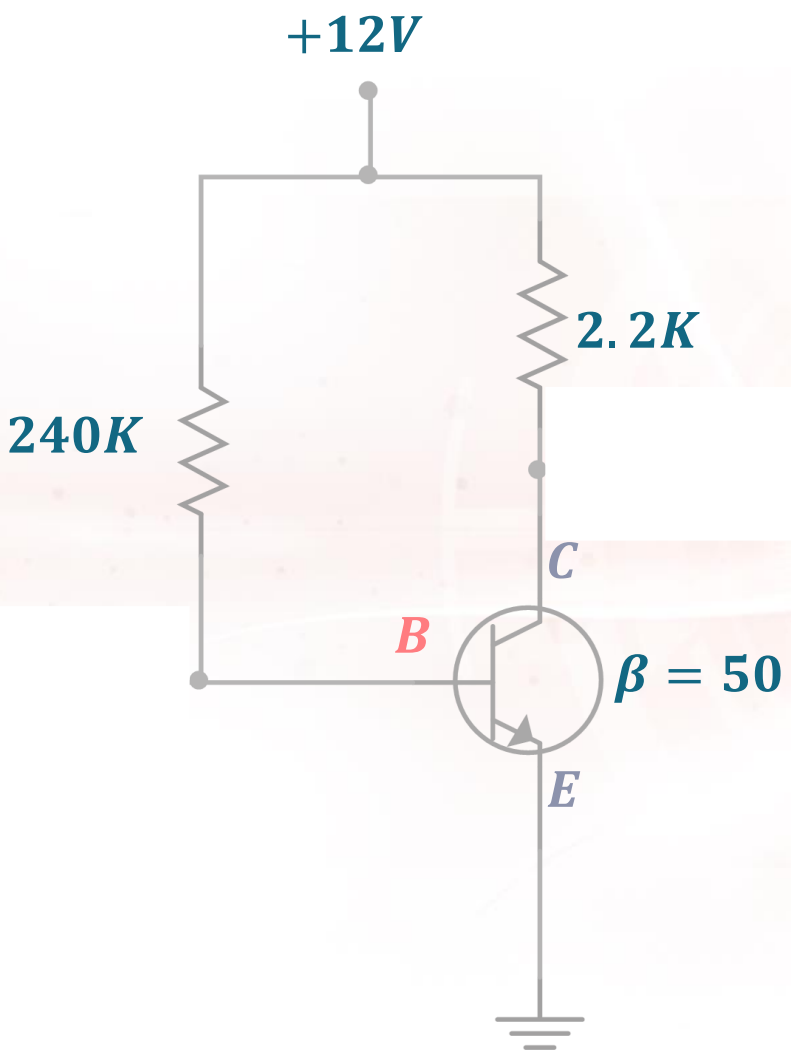
+12V
2.2K
240K
C
B
β = 50
E

$v_{C-}$

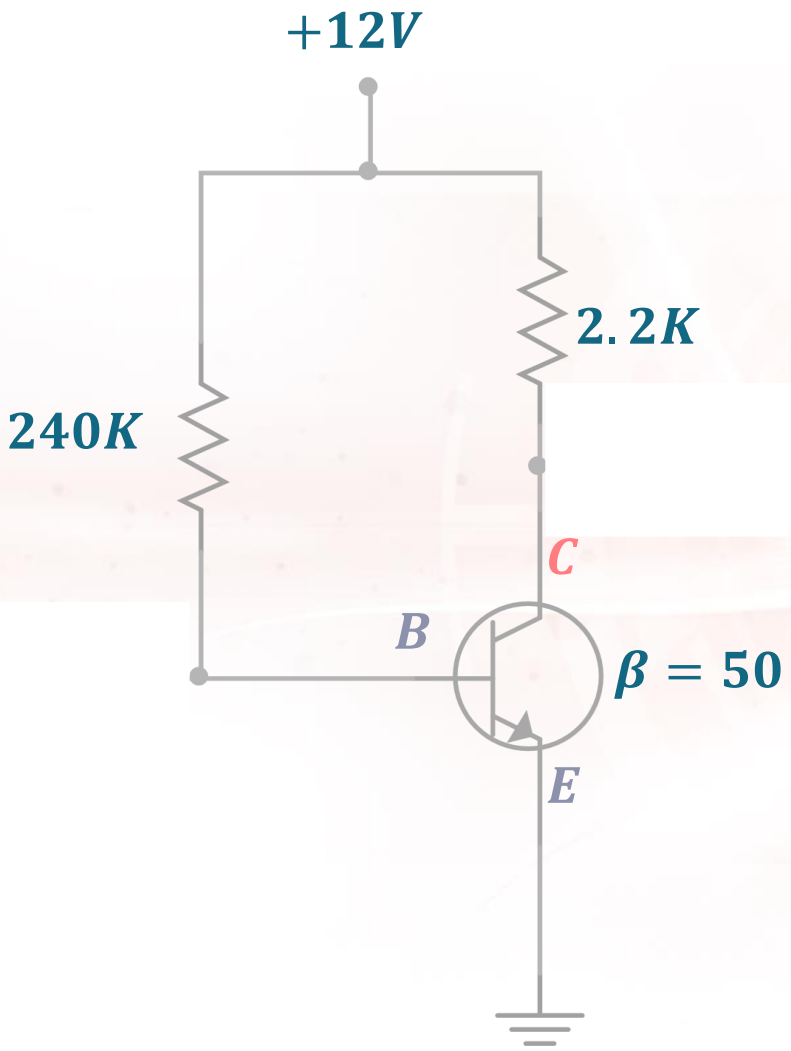

$v_{BC}$-

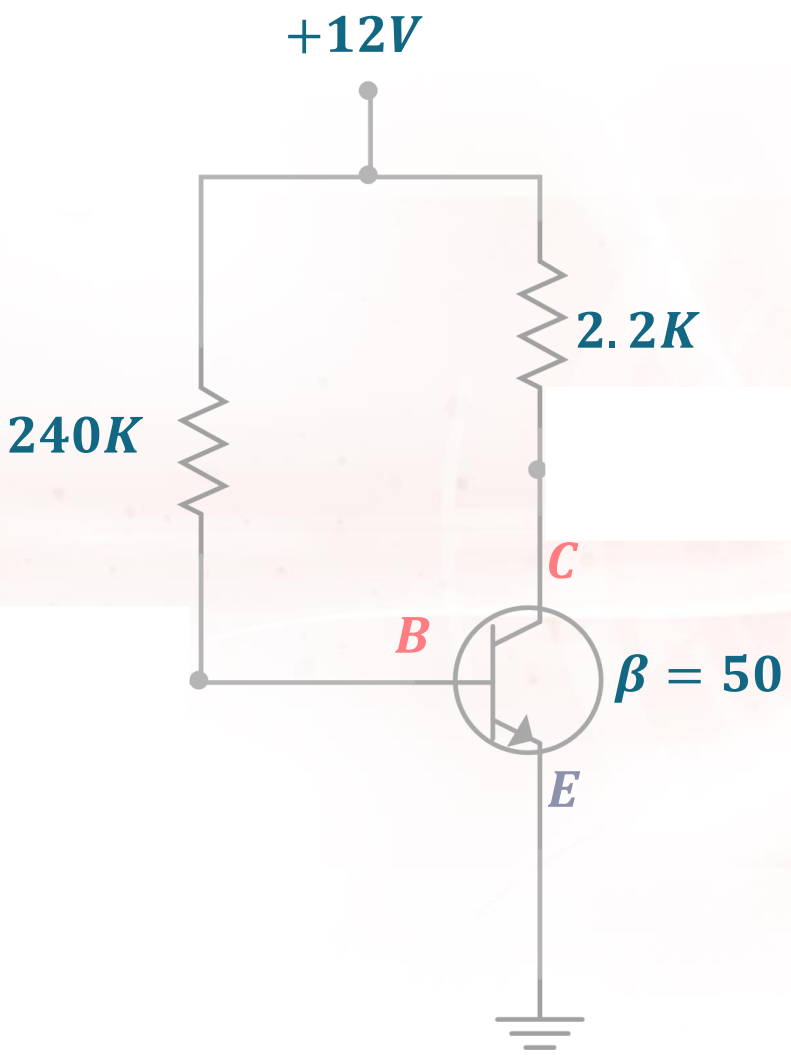

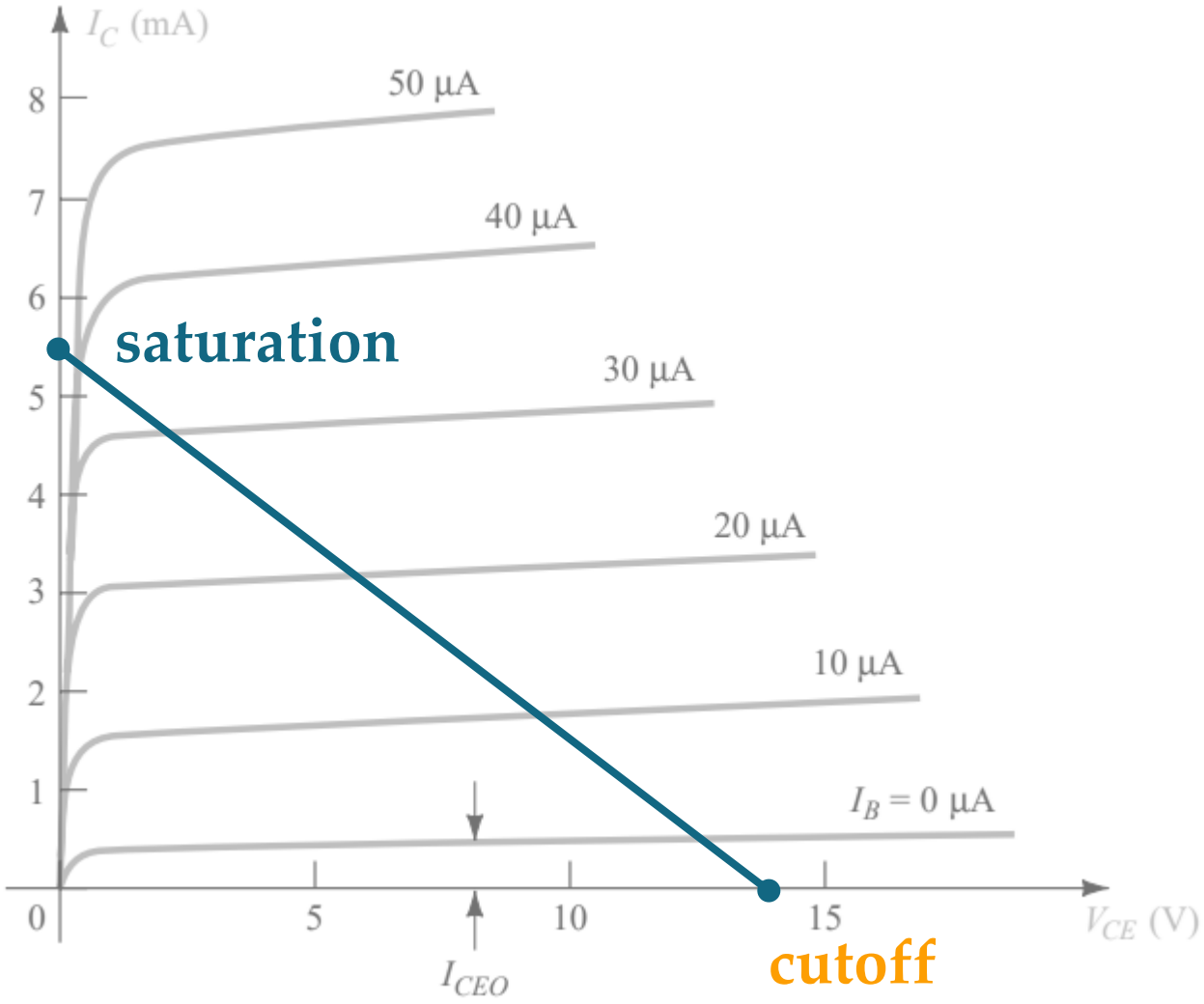


## Saturation Point

the maximum possible collector current

$$i_{C(sat)} | v_{CE} = 0$$

## Cutoff Point

the maximum possible collector-emitter voltage

$$v_{CE(cutoff)} | i_C = 0$$

# SATURATION POINT

"Mental **Short**"

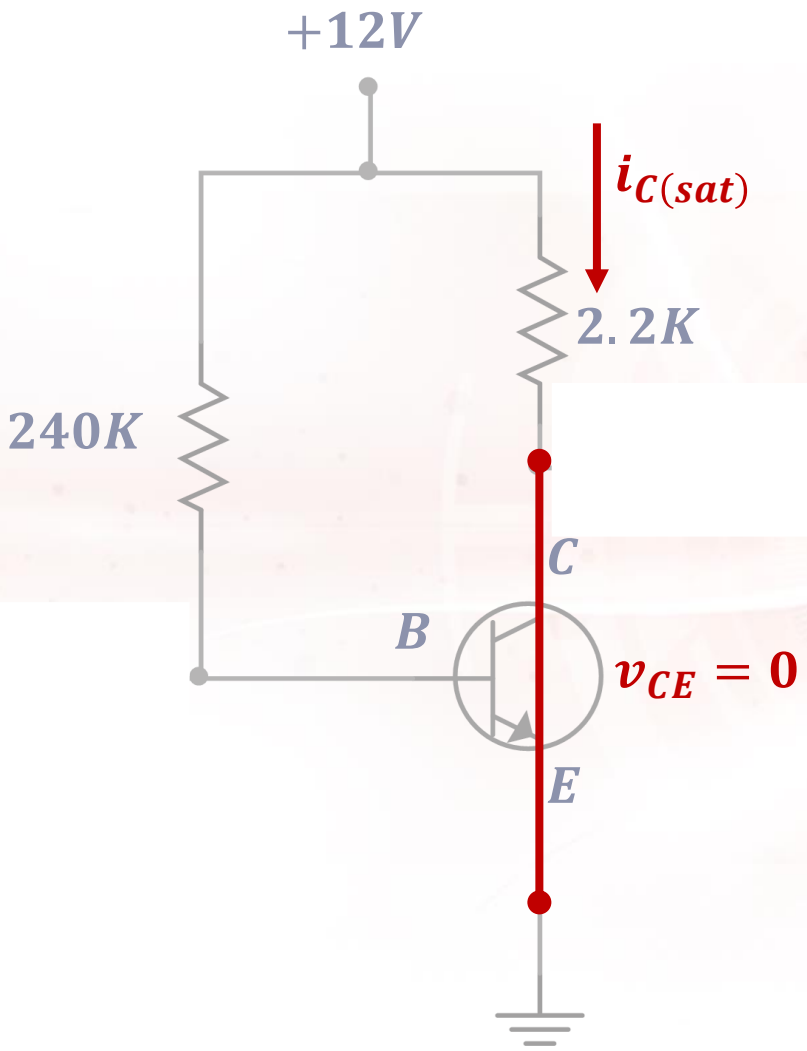

# CUTOFF POINT

"Mental Open"

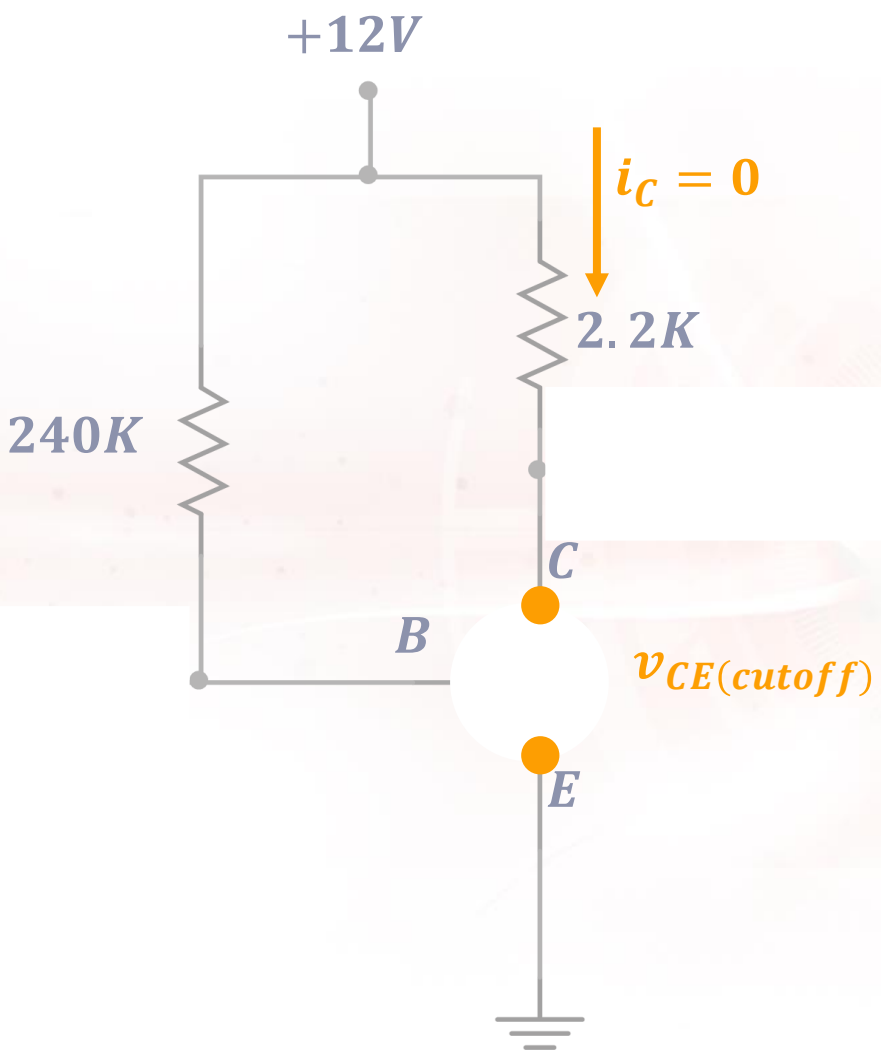

# LOAD LINE ANALYSIS

# LABORATORY